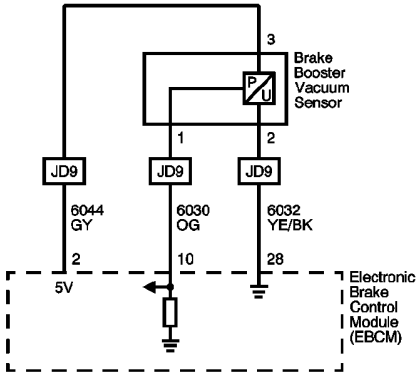
3
Brake
Booster
Vacuum
Sensor
P
U
1
2
JD9
JD9
JD9
6044
GY
6030
OG
6032
YE/BK
2
10
28
5V
Electronic
Brake
Control
Module
(EBCM)

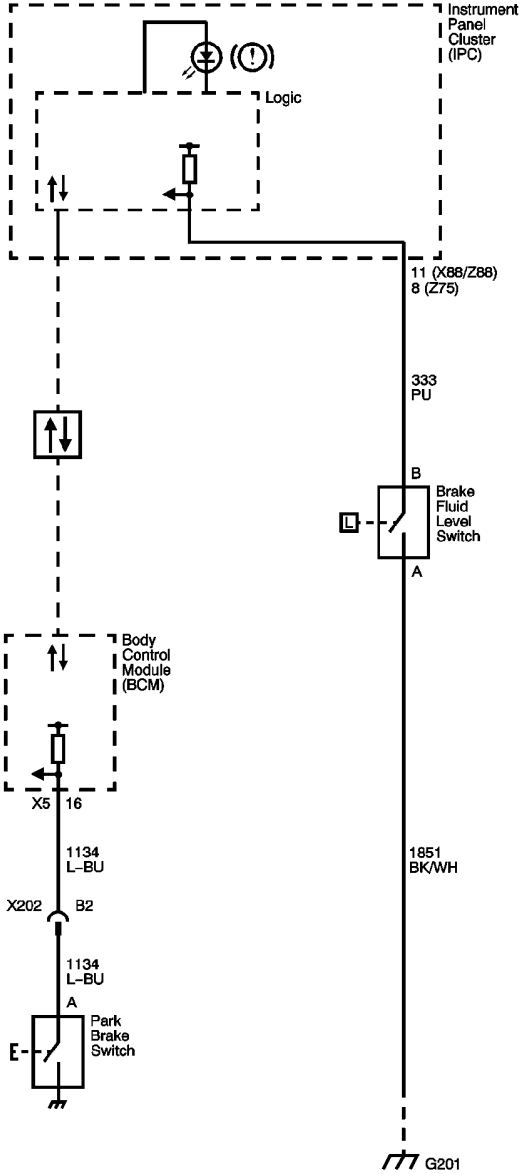
Instrument
Panel
Cluster
(IPC)
Logic
11 (X88/Z88)
8 (Z75)
333
PU
B
Brake
Fluid
Level
Switch
A
Body
Control
Module
(BCM)
X5
16
1134
L-BU
X202
B2
1134
L-BU
A
Park
Brake
Switch
1851
BK/WH
G201

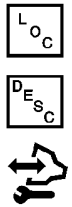
LOC
DESC